Star Tracker on Chip
Pre Development Phase
ESTEC Contract 4000103530

Final Presentation
ESTEC 16/12/2015

Selex ES

150 ANNI DI TECNOLOGIA

Contents

- Contract overview: scope and key goals
- Miniaturized attitude sensor roadmap
- Design
- Test Plan
- Test Results
- Compliance matrix vs. SOW STRoC specifications
- Compliance matrix vs. proposed STRoC requirements
- Future development
- Conclusions

Study objective and goals

The activity under contract had the following primary goals

- To design and develop a miniaturized optics to be used for a future "Star Tracker on a Chip" product
- To demonstrate, by test, the thermal, optical and stray-light performance of the STR on a chip optical and structural concept, thereby de-risking the future development

Project Goals

Low Cost

Low Mass

Simple integration

Complete passive thermal design

Monolithic barrel / main structure

Few materials

Contract Overview

- Contract #4000103530 dated May 2011
- CCN STROC-CCN-SG-001 dated 09/12/2013 for activities re-scheduling
- Activities divided 2 tasks
  - Task 1: Design and Development
  - Task 2: Manufacture, Assembly and Test
- Selex ES' Key Persons
  - Paolo Fidanzati — Project Manager
  - Chiara Finocchietti — System Engineer
  - Riccardo Gabrieli — Optics Designer
  - Francesco Galeotti — Thermo-Mechanical Designer
  - Luca Rigutini — AIT Technician

Key events and Milestones

	Event	Date	Remarks
KOM	Kick Off Meeting	01/06/2011	
	Progress Meeting	23/11/2011	
DR	Design Review	16/05/2012	
	Delta Design Review	12/12/2012	MOM7006313, rev A
TRR	Test Readiness Review	17/07/2014	MOM7014209, rev A
TRB	Test Review Board	16/12/2014	MOM7016197, rev A
FP	Final Presentation	16/12/2015	ESTEC

	Milestone	Date	Remarks
MS1	Design Review	Jul 2011	Completed
MS2	Activities Completion	Dec 2014	Completed

Deliverables

ID	Description	Code
D1	Design and Analysis Report	STROC-SG-AN-001, rev 0 TN7006616, rev A
D2	Test Plan	STROC-PLN-SG-001, rev B
D3	Test Report	STROC-SG-TR-001, rev A
D4	Final Presentation	This presentation
D5	Final Report	STROC-SG-FR-001, rev B
D6	STR Optical Model	Teste STR HW Delivered
D7	STR on a chip poster	Delivered

Miniaturized attitude sensor roadmap

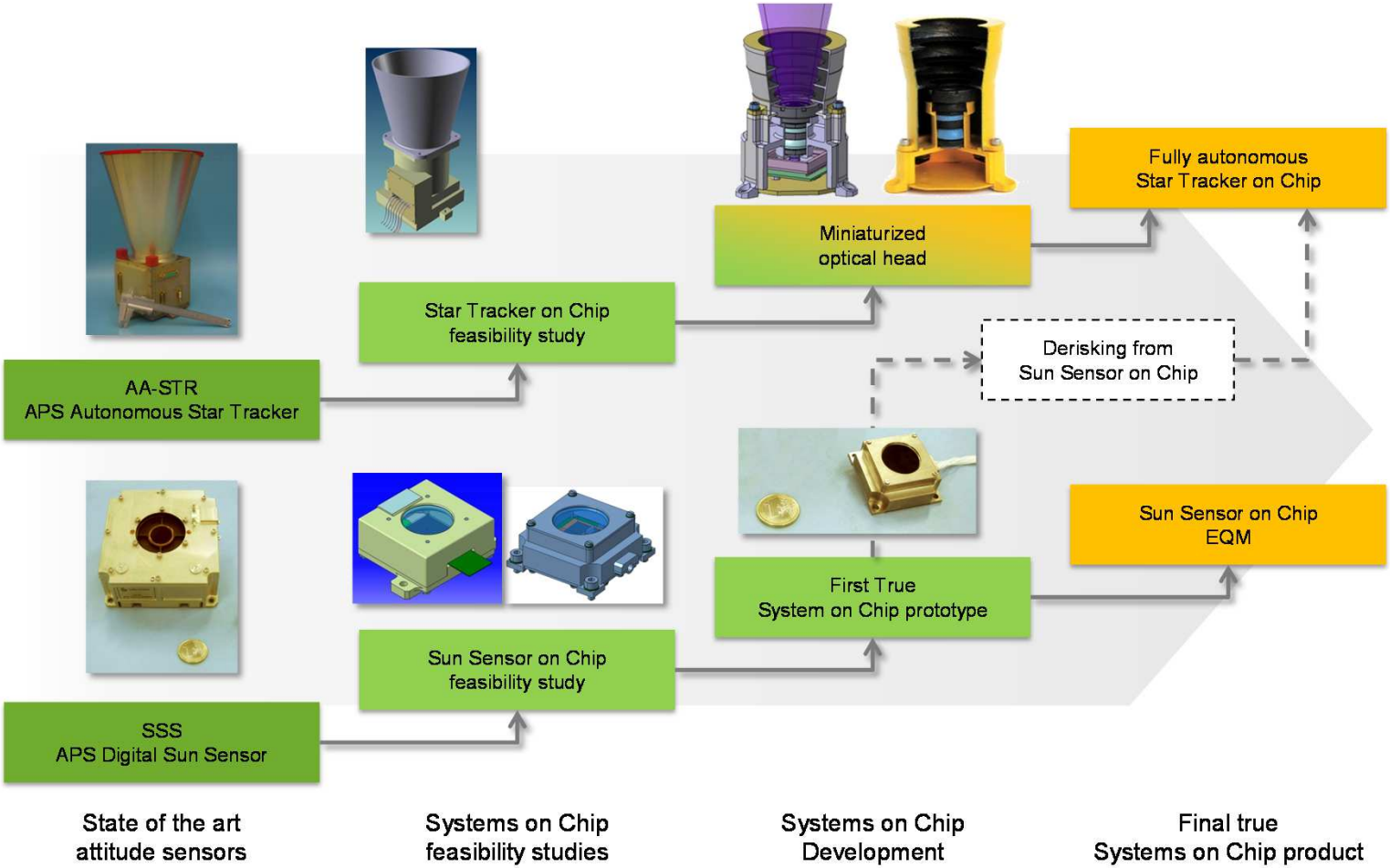

Star Tracker on a Chip Roadmap

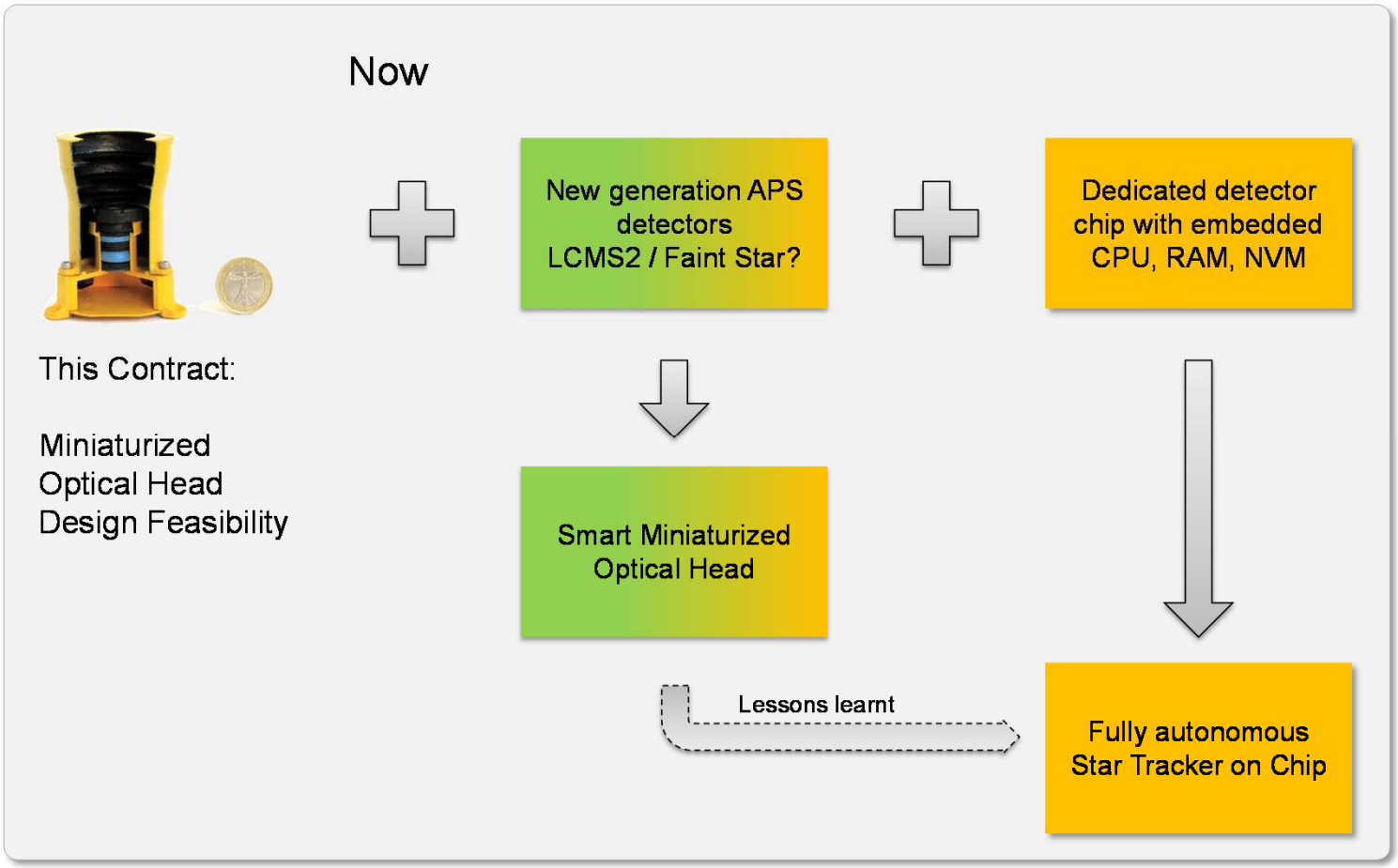

STRoC specifications from SOW

No.	Requirement	Note
1	The STR structure and optics shall have a combined mass of less than 120g	Test
2	The STR design shall assume a power dissipation of the electronics of between 0.35 and 0.45 Watts (constant) for the thermal design.	For information
3	The STR design shall be able to keep the chip temperature at <30deg C with a s/c mounting plate temperature of 50deg C and the sun at 40 deg from the boresight without the use of active cooling.	Test
4	The STR optical performance shall be consistent with a STR performance of 12 arcsec (absolute accuracy excluding bias) over the full temperature range. The contractor shall derive the required optical specification.	Test
5	The STR design shall be able to operate nominally with all sun aspect angles outside of the SEA of 40deg and with the Earth outside of the Earth Exclusion Angle of 25 deg.	Test hot and cold case
6	The STR optical design shall assume a 15 deg full cone FoV, a 10micron pixel pitch, a 512*512 pixel array, 45% peak QE*FF, a 4Hz update rate and all detector noise sources to be 40e per pixel each.	For information
7	The STR shall be designed to survive 18years in GEO.	Therefore only rad hard glass may be used.
8	The STR shall be designed for low cost and ease of AIT.	This implies few optical elements and few mechanical elements and removal of the need for focusing by shimming of the detector.

Proposed optical requirements

Requirements	Value	Remarks
Field of view	±7.5 degree	15 degree full cone
Entrance pupil diameter	15 mm	
Detector details	512x512 pixels, 10 µm size	APS detector
Spectral range	500 nm – 950 nm	
Optical bench material	Aluminium/Titanium	Aluminium goal Titanium as backup solution
Operating temperature range	-30°C / +40°C	Refined into -50° C to +15° C after thermal analysis (see section 8.3)
Optical quality	Ensquared energy within 1 pixel: 28% - 45% Ensquared energy within 2 pixels: ≥90%	
Distortion	<1%	Whole FOV
Stray light attenuation	$5x10^{-7}$	Exclusion sun angle 40°
Dimensions	Diameter ≤22 mm Length ≤27 mm	Without baffle

Objective design: optical solution trade-off

Proposed solution	Optical performances	Stray light control	Material reliability	Material availability
Inverse Schmidt collimator 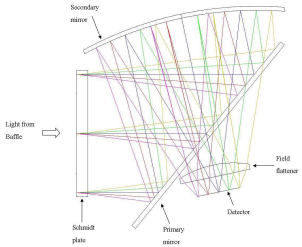	**GOOD**: very wide waveband, easy aberration control **BAD**: effective F# below the required 1.3	**BAD**: aperture very close to the focal plane	**GOOD**	**GOOD**
LZOS glass objective 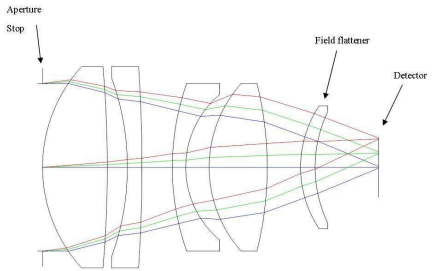	**GOOD**: compliance with first order requirements, the big LZOS glass selection simplifies the correction of chromatic aberration and thermal defocus	**GOOD**: the stray light attenuation factor of a usual star tracker is foreseen	**BAD**: to be verified	**BAD**: effective availability of all rad hard glass has to be checked
Ordinary radiation hardened glass objective 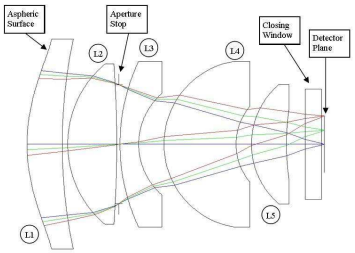	**GOOD**: compliance with first order requirements, a promising combination of glasses has been found	**GOOD**: the stray light attenuation factor of a usual star tracker is foreseen	**GOOD:** proven flight heritage	**GOOD**: all the selected materials are available at the moment and part of standard SES' choice for attitude sensors

Lens	Glass
L1	SUPRASIL
L2	SUPRASIL
L3	SF6G05
L4	LAK9G05
L5	LAK9G15
Closing Window	BK7G18

Objective design: optical solution trade-off

Proposed solution	Optical performances	Stray light control	Material reliability	Material availability
Inverse Schmidt collimator 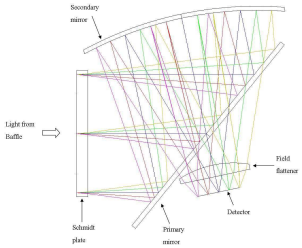	**GOOD**: very wide waveband, easy aberration control **BAD**: effective F# below the required 1.3	**BAD**: aperture very close to the focal plane	**GOOD**	**GOOD**
LZOS glass objective 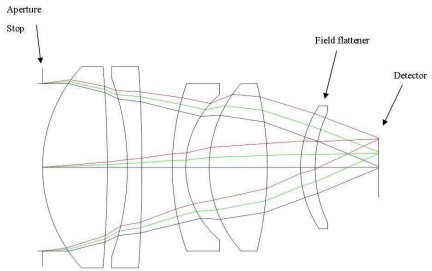	**GOOD**: compliance with first order requirements, the big LZOS glass selection simplifies the correction of chromatic aberration and thermal defocus	**GOOD**: the stray light attenuation factor of a usual star tracker is foreseen	**BAD**: to be verified	**BAD**: effective availability of all rad hard glass has to be checked
Ordinary radiation hardened glass objective 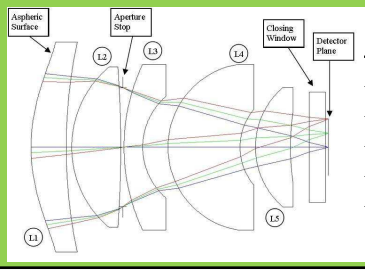	**GOOD**: compliance with first order requirements, a promising combination of glasses has been found	**GOOD**: the stray light attenuation factor of a usual star tracker is foreseen	**GOOD:** proven flight heritage	**GOOD**: all the selected materials are available at the moment and part of standard SES' choice for attitude sensors

Lens	Glass
L1	SUPRASIL
L2	SUPRASIL
L3	SF6G05
L4	LAK9G05
L5	LAK9G15
Closing Window	BK7G18

Objective design: selected configuration

The selected configuration makes use of 5 lens, one of which is an aspheric surface. 3 types of glasses are used for the lens: SUPRASIL and 2 different types of radiation resistant glass.

The objective is 27.02mm length and the largest lens L1 has a diameter of 19mm.

The optical design is optimized in the waveband 500nm÷950nm at the reference environmental condition of:

- Pressure: 0 ATM
- Temperature: 5° C

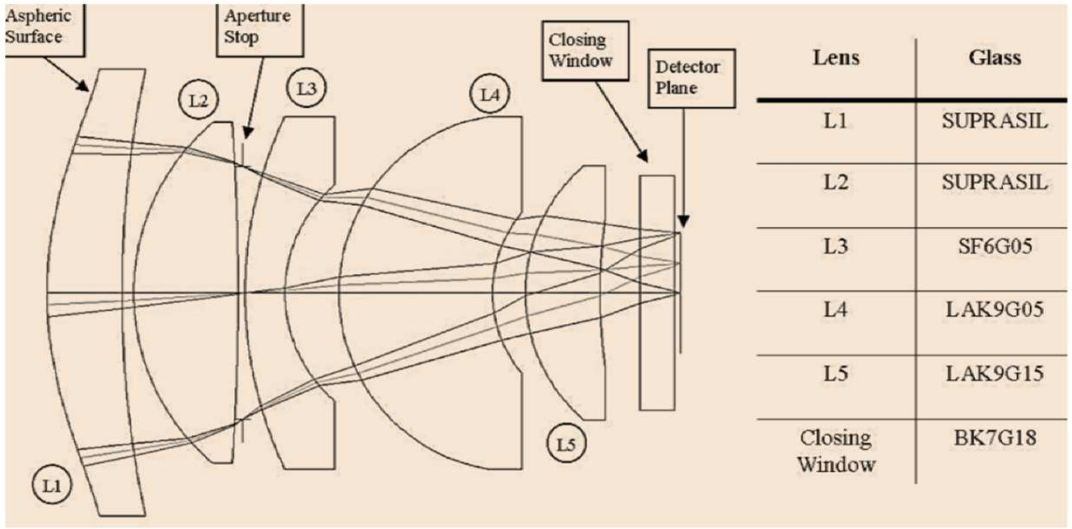

Lens	Glass
L1	SUPRASIL
L2	SUPRASIL
L3	SF6G05
L4	LAK9G05
L5	LAK9G15
Closing Window	BK7G18

The size of the lens and mechanics used to support them were properly dimensioned and dedicated diaphragms were inserted in the optical barrel to optimize the performance from stray light point of view.

STRoC design: architecture

The architectural design of star tracker mechanical parts was driven by:

- mass
- dimension
- manufacturing
- cost minimization
- a passive thermal control

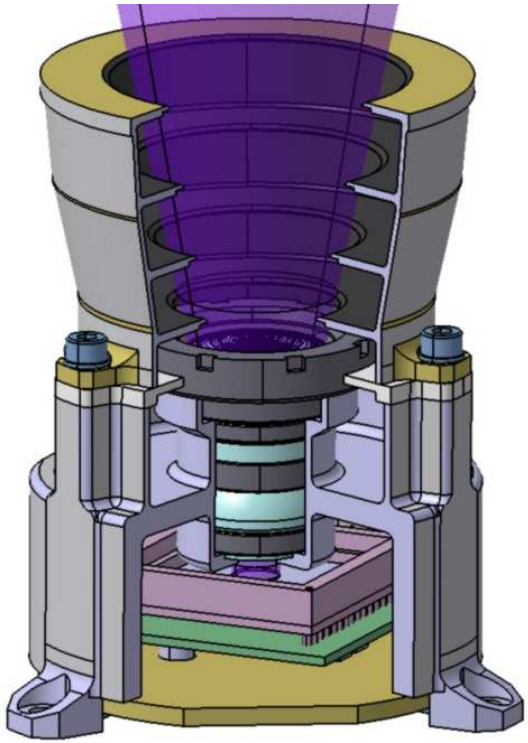

STRoC design: architecture

The architectural design of star tracker mechanical parts was driven by:

- mass
- dimension
- manufacturing
- cost minimization
- a passive thermal control

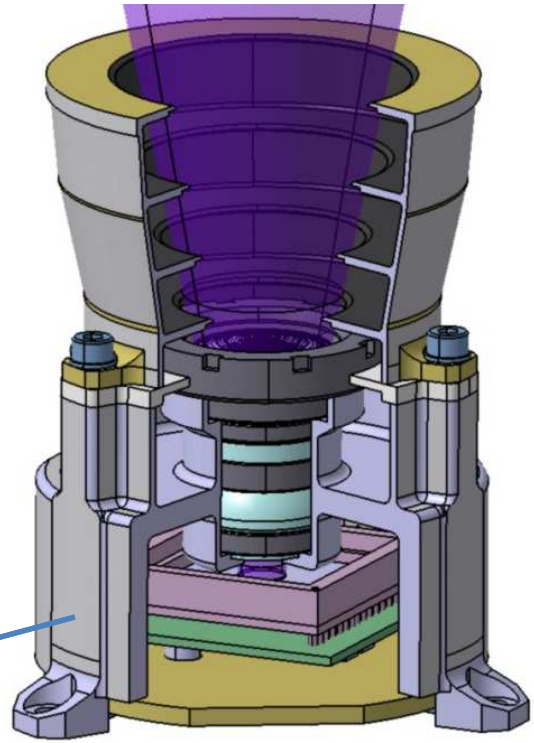

A monolithic Titanium piece acts as optical **barrel** and sensor main **housing**.

STRoC design: architecture

The architectural design of star tracker mechanical parts was driven by:

- mass
- dimension
- manufacturing
- cost minimization
- a passive thermal control

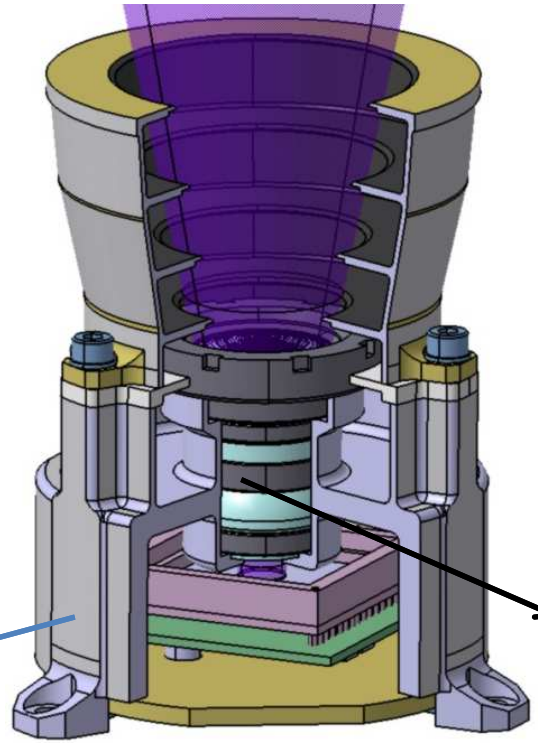

First 3 **spacers** are in Titanium and remaining 2 spacers in Aluminium alloy.

A monolithic Titanium piece acts as optical **barrel** and sensor main **housing**.

STRoC design: architecture

The architectural design of star tracker mechanical parts was driven by:

- mass
- dimension
- manufacturing
- cost minimization
- a passive thermal control

The **baffle** is attached on STR main housing.
It is designed for avoiding direct illumination between baffle diaphragms edge and the objective detector and for satisfying the stray-light performance expected

A monolithic Titanium piece acts as optical **barrel** and sensor main **housing**.

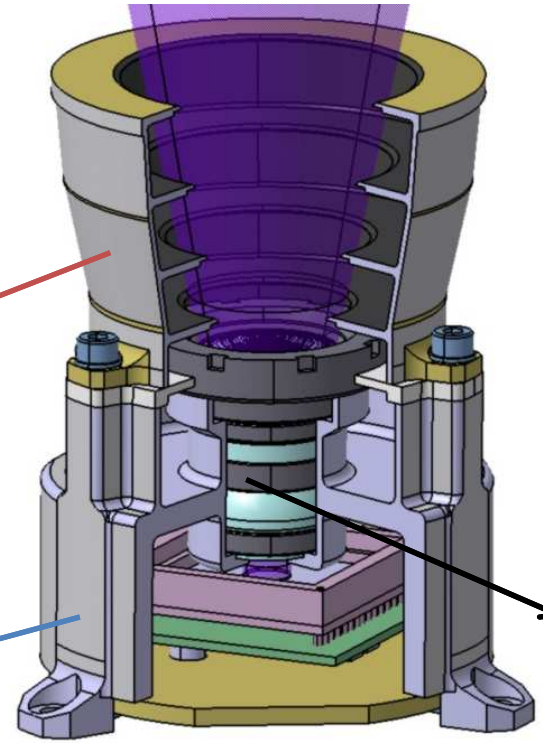

First 3 **spacers** are in Titanium and remaining 2 spacers in Aluminium alloy.

STRoC design: architecture

The architectural design of star tracker mechanical parts was driven by:

- mass
- dimension
- manufacturing
- cost minimization
- a passive thermal control

The **baffle** is attached on STR main housing.
It is designed for avoiding direct illumination between baffle diaphragms edge and the objective detector and for satisfying the stray-light performance expected

A monolithic Titanium piece acts as optical **barrel** and sensor main **housing**.

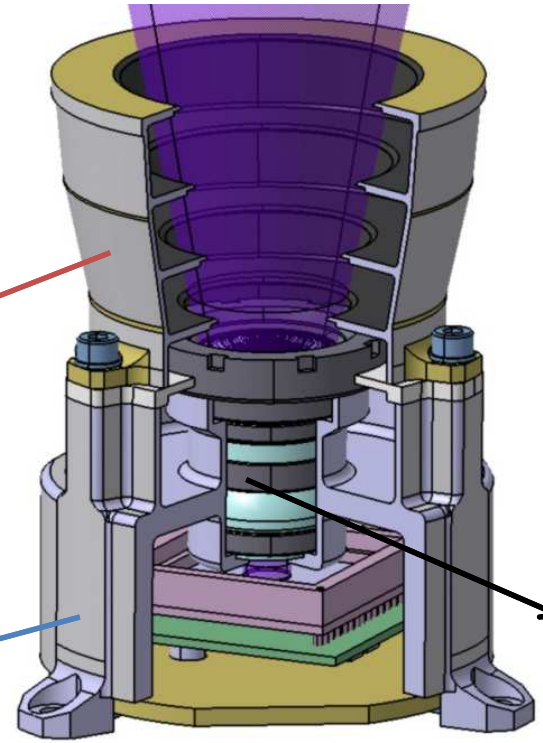

The **symmetry of the structure** allows a better control of thermo-elastic distortion, which could affect the sensor pointing.

First 3 **spacers** are in Titanium and remaining 2 spacers in Aluminium alloy.

STRoC design: architecture

The architectural design of star tracker mechanical parts was driven by:

- mass
- dimension
- manufacturing
- cost minimization
- a passive thermal control

The sensor supporting structure has an **isostatic mounting system** with the spacecraft panel in order to make easier controlling thermo-elastic forces across the interface.

The **baffle** is attached on STR main housing.
It is designed for avoiding direct illumination between baffle diaphragms edge and the objective detector and for satisfying the stray-light performance expected

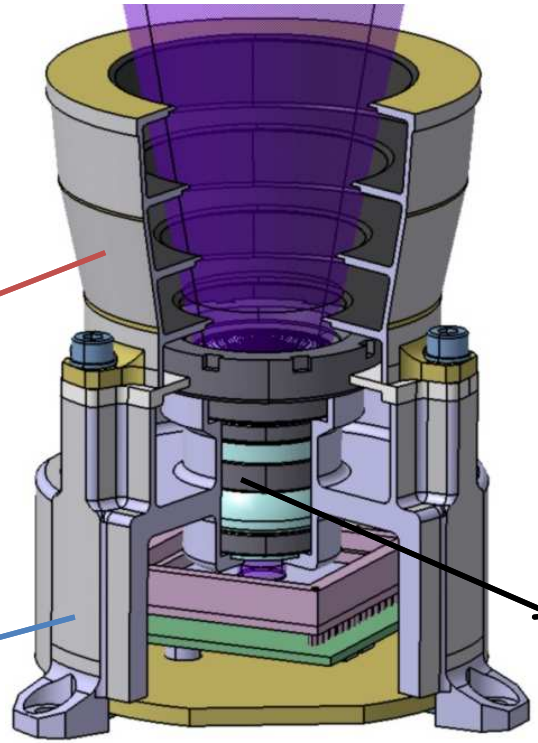

The **symmetry of the structure** allows a better control of thermo-elastic distortion, which could affect the sensor pointing.

First 3 **spacers** are in Titanium and remaining 2 spacers in Aluminium alloy.

A monolithic Titanium piece acts as optical **barrel** and sensor main **housing**.

Design solution

KEY FEATURES OF THE SELECTED DESIGN	
Feature	**Value**
Objective type	5 lenses
Focal length	19.3 mm
Wavelength band	500 nm – 950 nm
FOV	±7.5 deg
F#	1.3
Sun exclusion angle	40 deg
Mass budget	< 0.2 kg
Operating temperatures	-30° C / +40° C (at I/F)
Not operating temperature	-30° C / +50° C (at I/F)

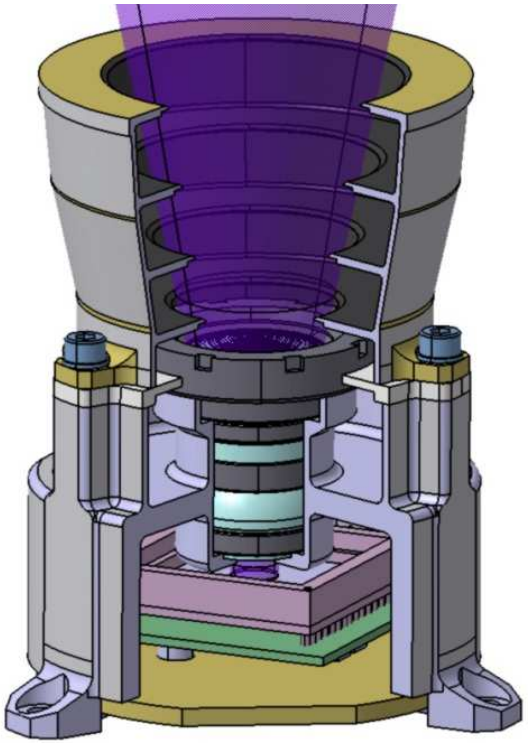

Thermal analysis of the design solution

The thermal analysis was conducted for the following sensor-S/C configurations:

- the sensor thermally isolated from the S/C
- the sensor in thermal conduction with the S/C

Thermal analysis of the design solution

The thermal analysis was conducted for the following sensor-S/C configurations:

- the sensor thermally isolated from the S/C
- the sensor in thermal conduction with the S/C

Baseplate temperature range	Sun Angle (hot case)	Resulting APS temperatures	
		Sensor thermally isolated from the S/C	Sensor in thermal conduction with the S/C
Not operating -30°C/+50°C	40°C	-82.7°C/+3.5°C	-58.2°C/+16.7°C
Operating -30°C/+40°C	40°C	**-48.9°C**/**+19.9°C**	-36.6°C/**+27.8°C**

The configuration with the sensor thermally isolated from the S/C is preferable due to lower APS temperatures at hot cases so guaranteeing acceptable noise levels.

A heater shall be foreseen for keeping the APS temperature above -40 ° C (i.e., survivability limit) and the maximum heat power dissipation estimated in the sensor thermally isolated case is about 0.8 W.

STRoC expected performances

Optical performance in temperature

Ensquared Energy (%)										
	1 Pixel					2 Pixel				
Temp	**-17.5°C**	**-50°C**		**15°C**		**-17.5°C**	**-50°C**		**15°C**	
EE	Value	Value	ΔESE	Value	ΔESE	Value	Value	ΔESE	Value	ΔESE
0°	42.4	35.3	7.1	46.7	4.3	87.3	71.3	10	83	4.3
2.5°	44.3	35.9	8.4	43.4	0.9	85.9	77.4	8.5	79	1.6
3.75°	45.3	37.4	7.9	38.6	6.7	83.4	81.9	1.5	74.4	7.5
5°	44.5	39.5	5	32.8	11.7	80.3	83.8	3.5	69	11.3
7.5°	39.7	33.3	6.4	25.7	14	78.4	79.7	1.3	66.1	13.6

The system does not reach the design goal of:

- 1 pixel ensquared energy at +15° C for:
  - on axis (maximum accepted value is 45%)
  - 7.5° field (minimum accepted value is 28%).
- 2 pixels ensquared energy at +15° C above 90%; such threshold is reached within 3 pixels.

According to SES experience, the expected performance drop due to these non-compliances is considered acceptable for this particular sensor.

In the whole temperature range the distortion worst case is: ΔDIST<0.001%

The system is well stable in the whole temperature range for distortion.

STRoC expected performances

Effects of centroiding algorithm

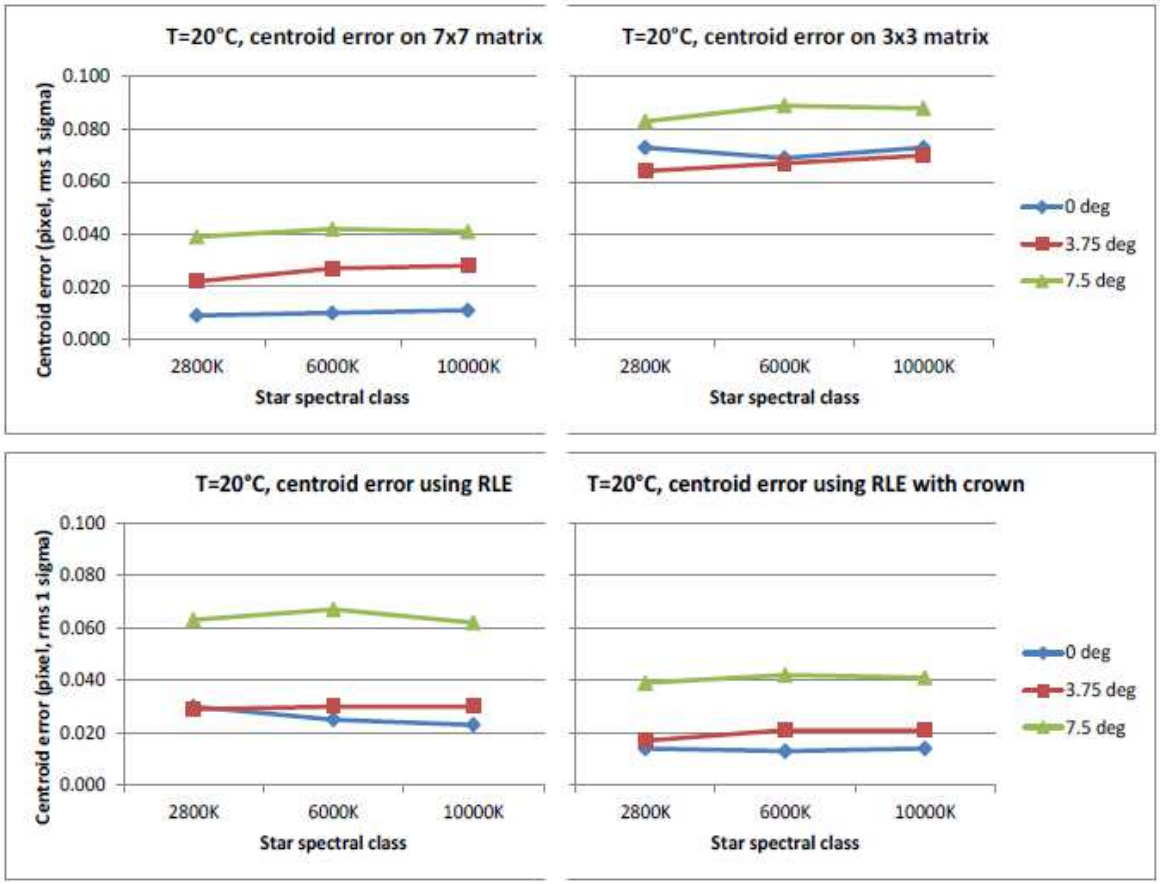

Using the RLE without crowing the error is ~0.03 pixels (i.e., 3.2 arcsec) in the central part of the FOV and the error increases to ~0.07 pixels (i.e., 7.4 arcsec) at the edge of the FOV. The error can be improved with crowning, especially when the star is off axis.

STRoC expected performances

Effects of star spectral classes

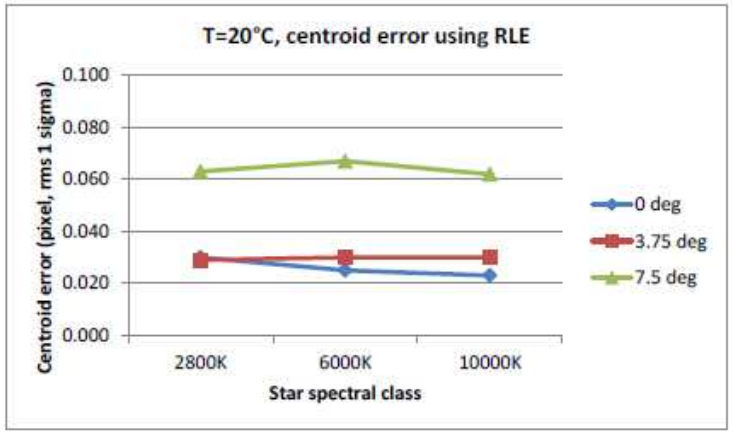

The chromatic aberration is well limited with a variation of error within 0.01 pixels among the three star spectral classes.

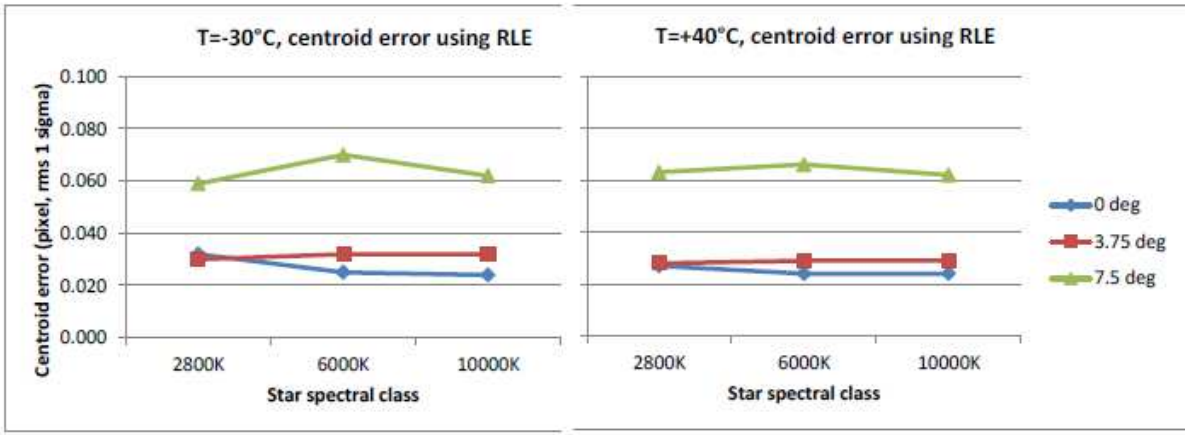

STRoC expected performances

Effects of optics temperature

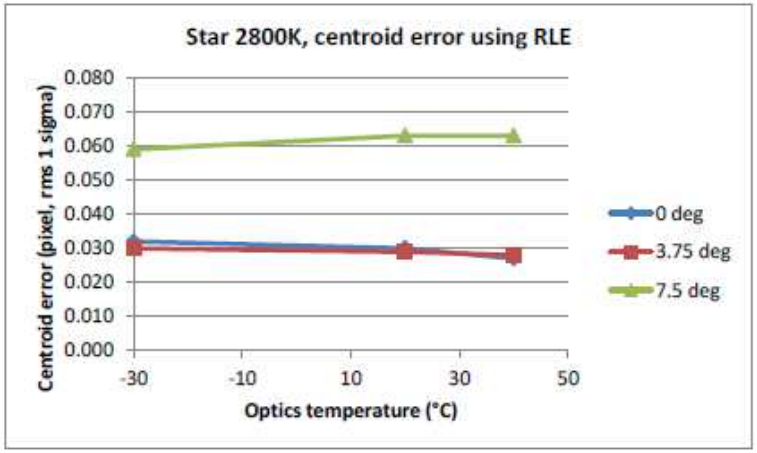

The objective is well athermalized indeed error variation due to optics temperature changes is within 0.005 pixels (i.e. ~0.5 arcsec) between -30° C and +40° C

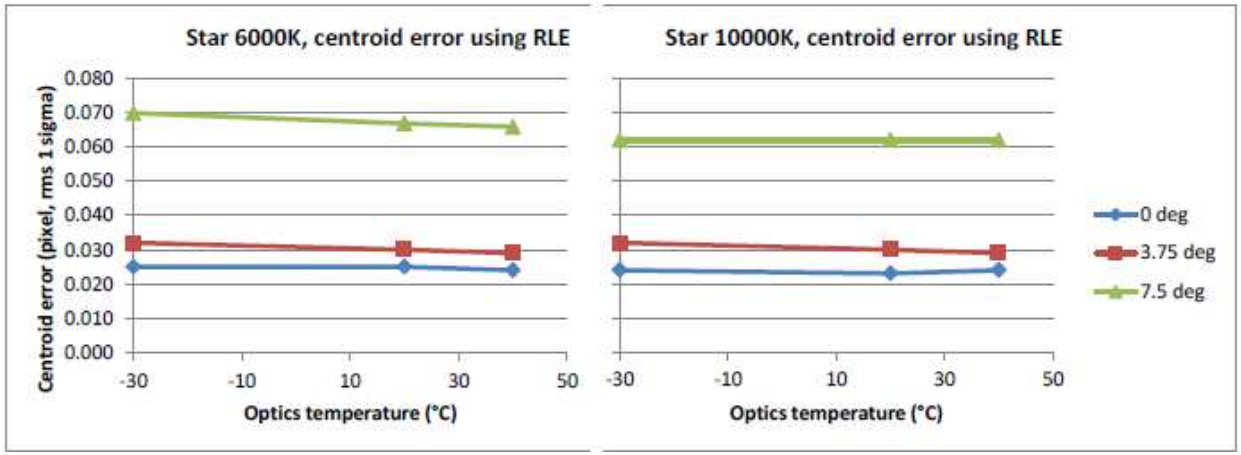

STRoC expected performances

Comparison between rad hard and standard glasses

Rad Hard glasses

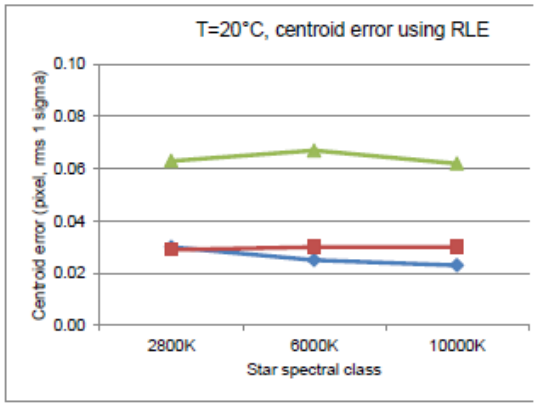

Non Rad Hard glasses

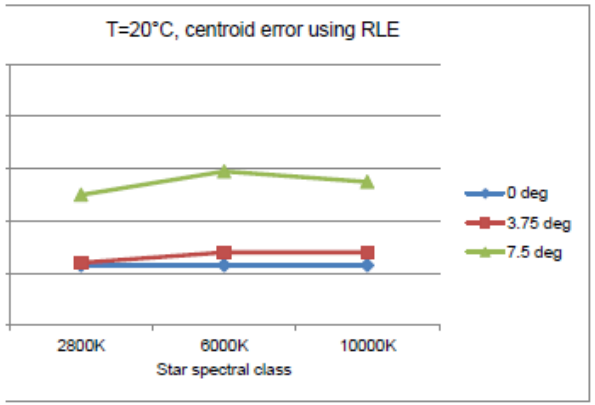

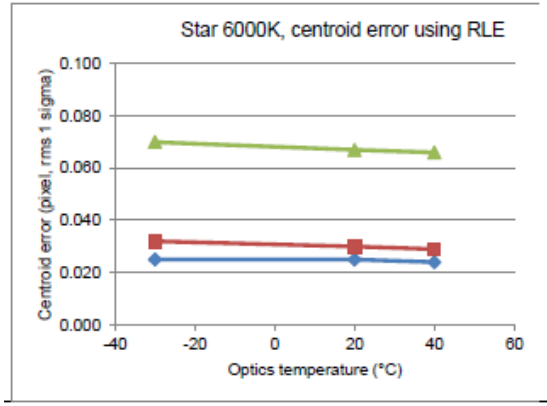

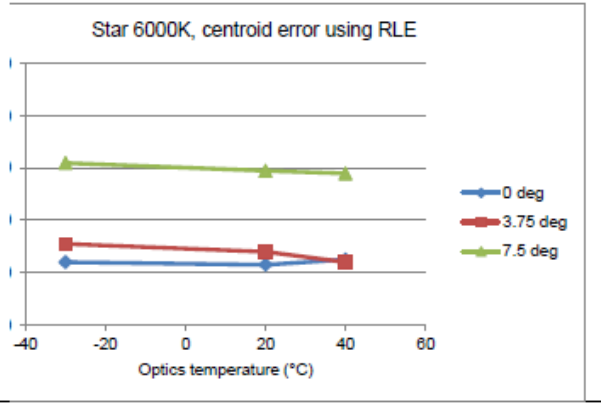

The differences between rad hard and standard glasses are negligible.

For the STRoC prototype standard glasses were selected.

STRoC prototype

The prototype was manufactured under the following assumptions:

- Use of Schott standard glasses instead of rad hard ones. This choice is for ease of glass availability with negligible changes in performance.
- Single piece main housing with lenses support, ring and the first three spacers (starting from the bottom) in Titanium, remaining two spacers in Aluminum alloy.

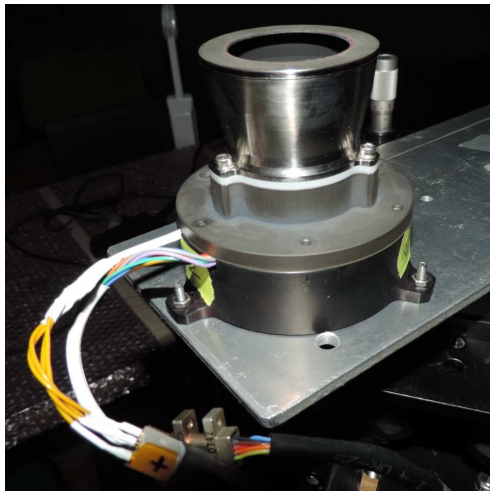

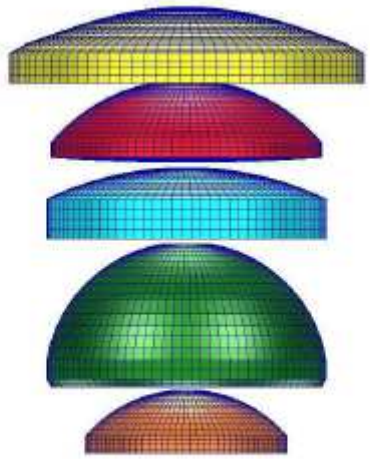

Figure 7.2-4: Lenses

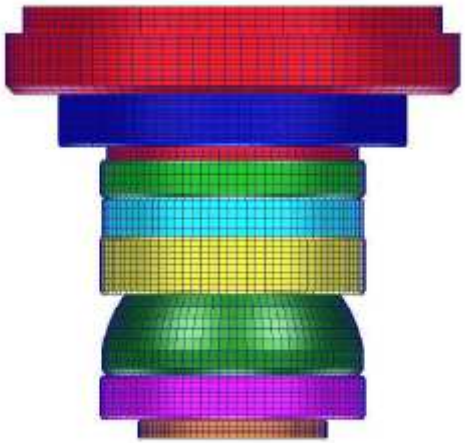

Figure 7.2-5: Lenses and spacers mounting

STRoC prototype

The prototype is a STR optical model constituted by:

- A sunshade providing an appropriated protection against light from the Sun, the Earth or other bright objects outside the FOV or reflected by the S/C itself.

- An electro-optical module including:
  - the optical system, that images a zone of the sky on the APS detector
  - the Sun Sensor on Chip prototype board for image acquisition

- A main structure which supports the above modules

The rear part of the housing design was adapted for using the "Sun Sensor on Chip" ESA breadboard.

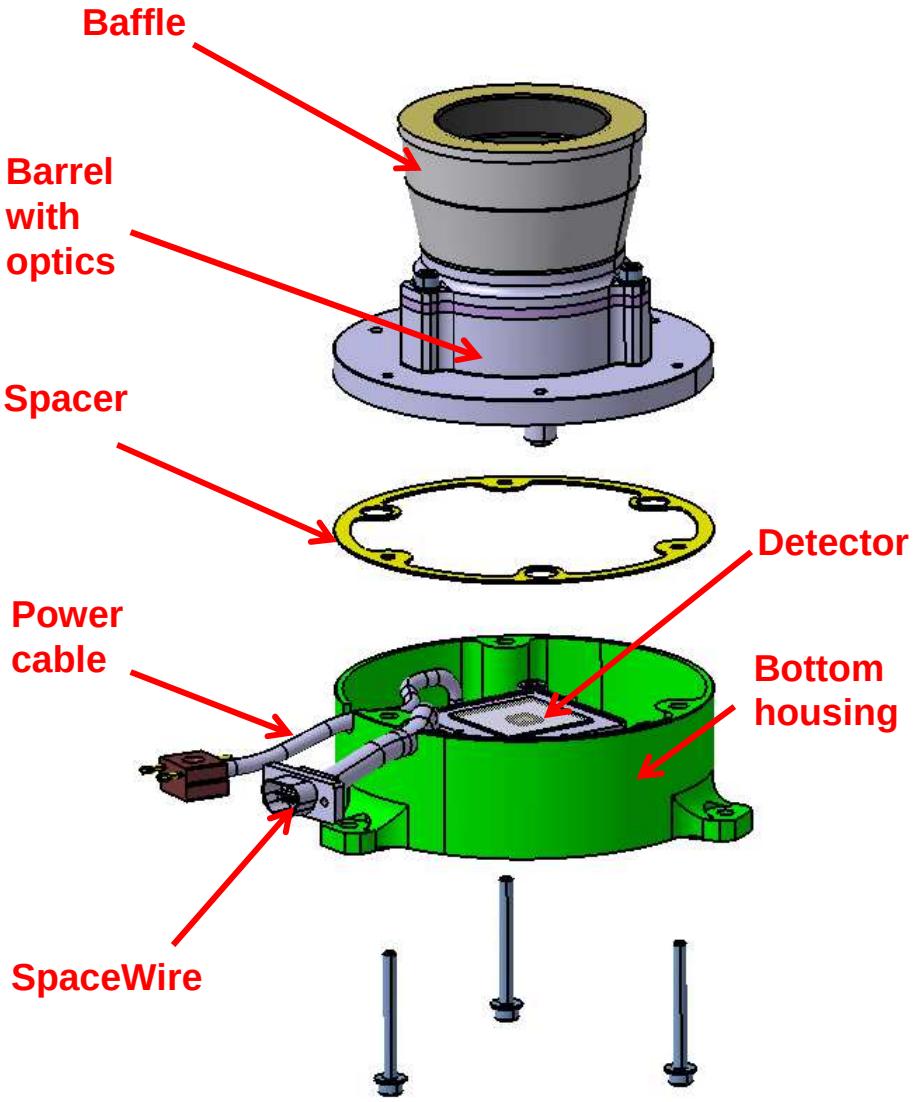

“Sun Sensor on Chip” ESA breadboard

Detector Main Caractheristics		
Feature / parameter	**SSoC prototype, measured[1]**	**Remarks**
Pixel size	10µm	
Number of pixels	512x512	
QE x FF at 550 nm	50%	
QE x FF, 400-700 nm	47%	Average value within wavelength ranges 400-700 nm.
FWC	120 ke-	
FPN	< 200e-	
temporal noise	< 127e-	
DC, BOL	200..6600 e-/s	
DCNU, BOL	300..1300 e-/s	
DC, EOL	67 ke-/s[2]	EOL = 300 kRad
DCNU, EOL	n/a	
PRNU	3.4% rms	

Note:
[1] Performance parameters as measured on prototype wafer HMH1J-01, standard UMC CMOS process configuration.

[2] This is not representative due to large dark current spread and only one 300 krad sample irradiated.

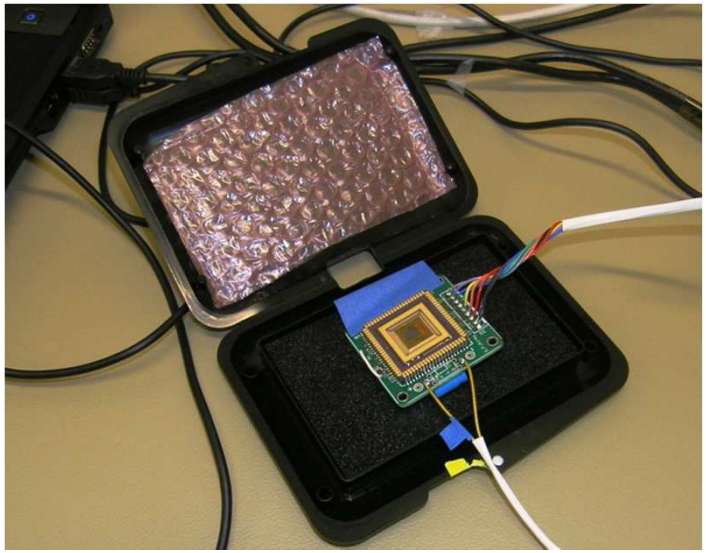

Test Plan

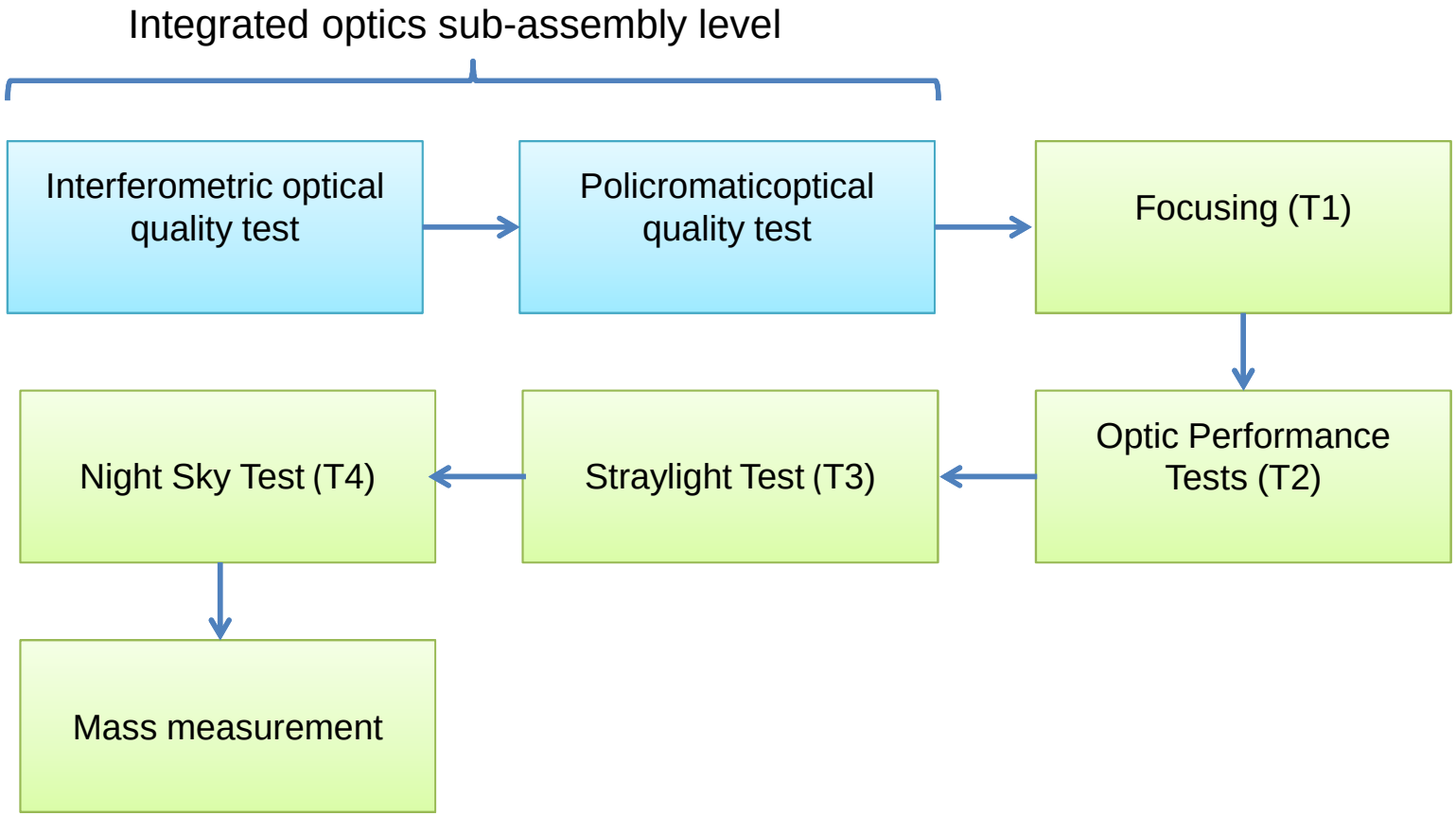

Optical quality tests during objective assembly

STRoC Test Plan					
Test type	**Test purpose**	**Assembly level**	**Light source**	**Measurement system**	**Pass/Fail criteria**
Interferometric optical quality test	To check objective mounting in terms of alignment and manufacturing errors for verifying the status of compliance with manufacturing drawing tolerances	Objective without detector	Monochromatic light	Interferometer	Correspondence between interferometry measurement parameters and optics simulations (Zernike polynomials, etc……)
Polychromatic optical quality test	To characterize the objective in terms of energy distribution and ensquared energy	Objective without detector	Polychromatic light	3.2µm pixel size commercial CCD camera with PC controlled image acquisition system	Compliance with ensquared energy requirements of Table 3.5-2

Focusing

STRoC Test Plan					
Test type	**Test purpose**	**Assembly level**	**Light source**	**Measurement system**	**Pass/Fail criteria**
Focusing (T1)	Investigating the integration of the prototype board with the optics to allow the tuning of the focal plane positioning with respect to the optics.	STRoC prototype with mounting interface	Star simulator	Acquisition of the FOV image by using the SSOC EGSE SW and by commanding the Sun Sensor on Chip in camera mode. The test was executed by using a set of spacers with various thicknesses	The star spot energy was focused over a 3x3-pixel window. The 7x7-pixel square matrix centered on the star spot was considered for a better evaluation of the image acquired. The following requirements were taken into account after the subtraction of the background signal value: • DN value of the central pixel: between 35% and 45% • total DN value within 3x3 pixels square matrix: > 90%

Focusing: Test Results

Dimensions of the matrix center on the star spot [pixels]	Total number of pixels	Measured Ensquared energy [%]	Required value [%]	Pass/Fail
1x1	1	46.01	between 35% and 45%	F
3x3	9	93.94	N.A.	N.A.
4x4	16	94.77	N.A.	N.A.
5x5	25	96.97	N.A.	N.A.
6x6	36	98.07	N.A.	N.A.
7x7	49	100	N.A.	N.A.

0	0	3	5	0	0	0
0	0	0	0	1	0	0
0	0	17	29	13	0	0
0	0	35	167	31	0	0
0	0	1	39	9	1	0
0	0	0	1	0	0	0
0	0	0	0	0	0	0

Test results confirm the analysis predictions:

- the system does not reach the design goal of 1 pixel ensquared energy: measured 46% value instead of 45% maximum acceptance value.
- the system is unable to reach an ensquared energy value above 90% inside 2 pixels; such threshold is reached within 3 pixels.

Optic Performance Tests

STRoC Test Plan					
Test type	**Test purpose**	**Assembly level**	**Light source**	**Measurement system**	**Pass/Fail criteria**
Optic Performance Tests (T2)	Verifying optics quality over the FOV for various temperature conditions (Tamb, 30°C, 40°C) by measuring the star spot shape variation w.r.t the one obtained during initial test at ambient temperature. The test at ambient temperature was repeated by setting a fainter star to evaluate optic performance vs magnitude also.	STRoC prototype with mounting interface	Star simulator	Acquisition of the FOV image by using the SSOC EGSE SW and by commanding the Sun Sensor on Chip in camera mode.	Due to limits of the used set-up, some difficulties were met with star spot centering on the pixels of the detector for each star position in the FOV. Thus, the pass/fail criteria for optic performance tests were relaxed as follow: • Test at ambient temperature, 30°C and 40°C: the 3x3 pixel ensquared energy of the star spot for the off axis star shall be greater than 80%.

Optic Performance Tests: Results

- The star spot does not change significantly with temperature (test performed at Tamb, 30° C and 40° C)
- the ensquared energy on the 3x3 pixel star spot matrix is always greater than 80% of the total star energy for each temperature and also for each star position in the FOV
- the measured star barycenter variations due to optics temperature changes are within ~60 arcsec between ambient temperature and +40° C.

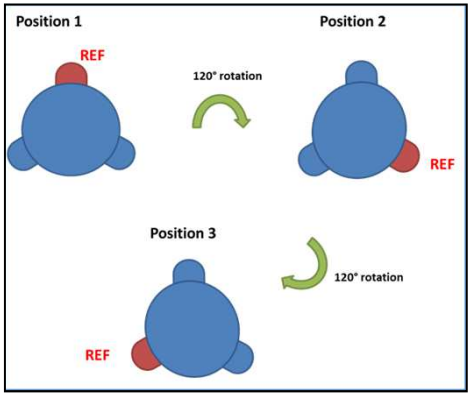

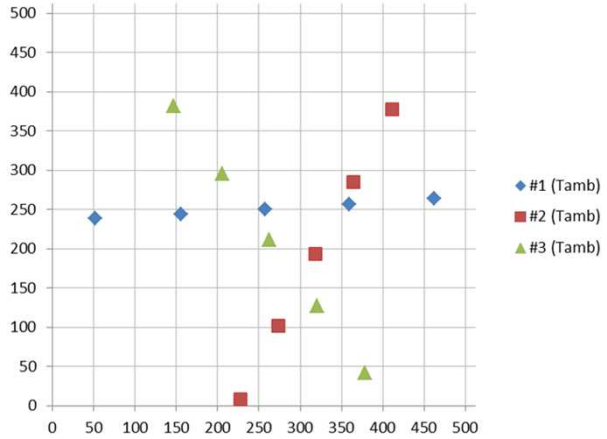

Optic Performance Tests: Results

- The star spot does not change significantly with temperature (test performed at Tamb, 30° C and 40° C)
- the ensquared energy on the 3x3 pixel star spot matrix is always greater than 80% of the total star energy for each temperature and also for each star position in the FOV
- the measured star barycenter variations due to optics temperature changes are within ~60 arcsec between ambient temperature and +40° C.

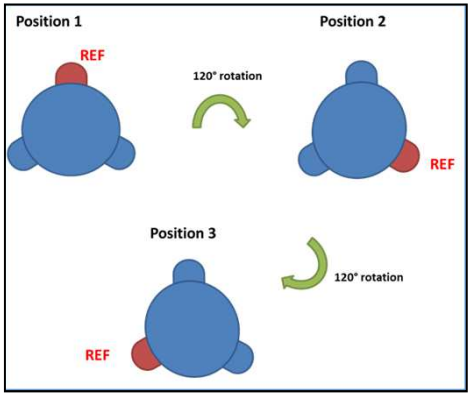

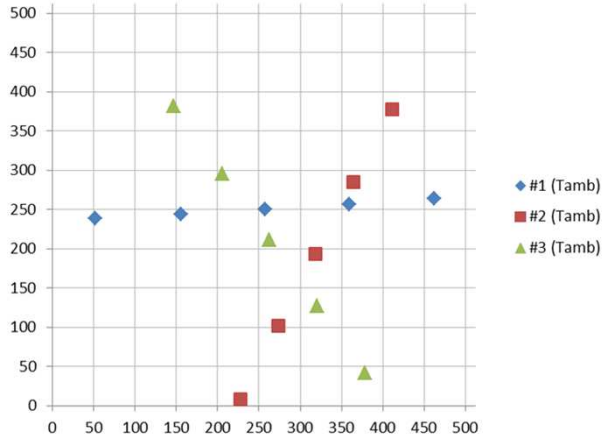

The star barycenter position due to optics temperature changes can be confidently compensated with:

- a suitable calibration algorithm for the focal length and the other star position errors
- a more suitable star detection algorithms and barycenter position determination algorithm

Straylight Test

STRoC Test Plan					
Test type	**Test purpose**	**Assembly level**	**Light source**	**Measurement system**	**Pass/Fail criteria**
Straylight Test (T3)	Evaluating the stray-light attenuation factor for Sun exclusion angle values of 30, 40 and 50 deg	STRoC prototype	Collimated Sun simulator light source used for standard SES stray-light tests	Acquisition of the FOV image by using the SSOC EGSE SW and by commanding the Sun Sensor on Chip in camera mode.	Attenuation factor lower than $5x10^{-7}$ for Sun Exclusion Angle ≥ 40 deg

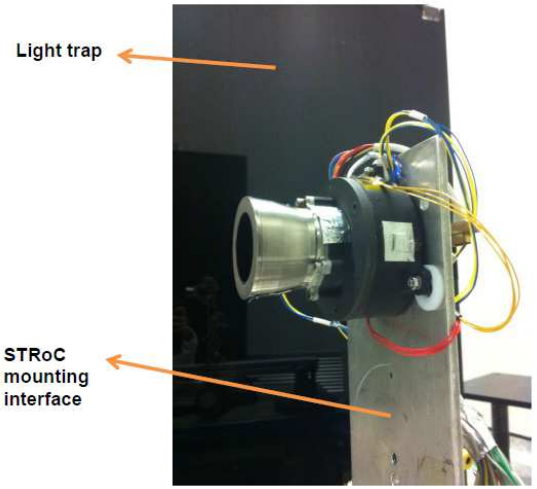

Straylight Test: Results

Net mean In-light images (i.e., without dark image) with:

30 deg Sun angle

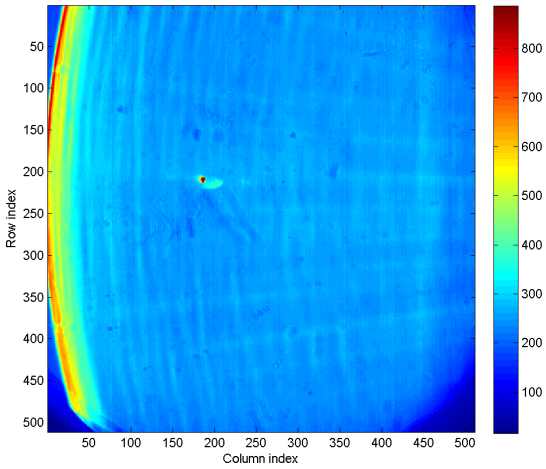

40 deg Sun angle

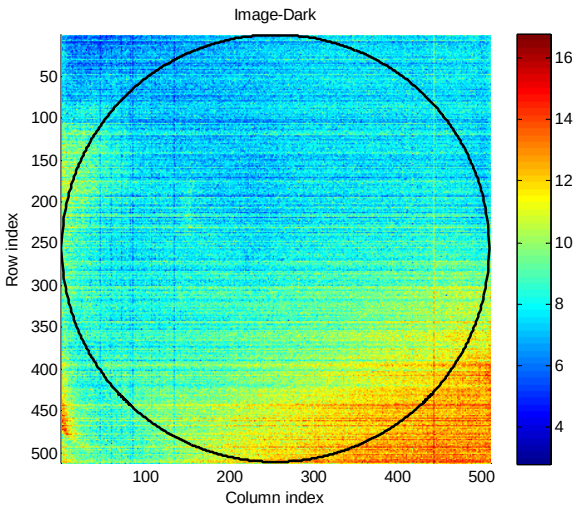

50 deg Sun angle

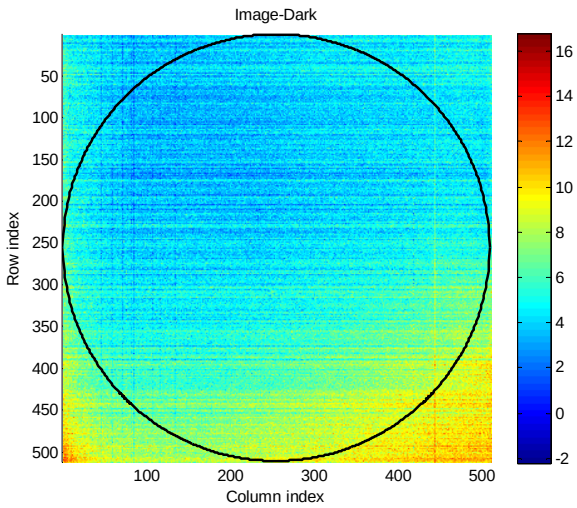

Straylight Test: Results

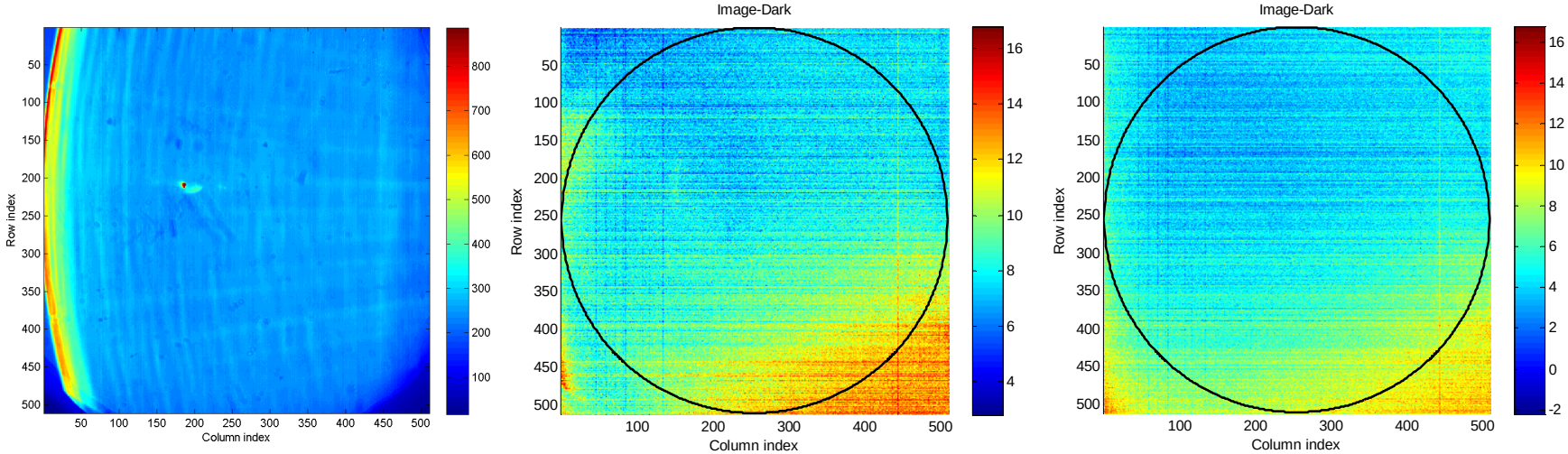

Unit under test: STRoC prototype	Procedure: T3, STRAY LIGHT TEST		
Sun Angle	30deg	40 deg	50 deg
Meas. straylight Mean value	6.80E+04 e/s/pix.	2.26E+03 e/s/pix.	1.39E+03 e/s/pix.
Meas. Straylight Max value	2.29E+05 e/s/pix.	4.34E+03 e/s/pix.	3.72E+03 e/s/pix.
Sun Rescaled straylight Mean value	1.02E+06 e/s/pix.	3.39E+04 e/s/pix.	2.09E+04 e/s/pix.
Sun Rescaled straylight Max value	3.44E+06 e/s/pix.	6.51E+04 e/s/pix.	5.58E+04 e/s/pix.
Mean PST value	1.02E-05	3.38E-07	2.08E-07
Max PST value	3.42E-05	6.49E-07	5.56E-07
Requisite on PST value	N.A.	< 5*10^(-7)	< 5*10^(-7)
Test result	-	P	P

Maximum power density **measured over the entire detector**

Straylight Test: Results

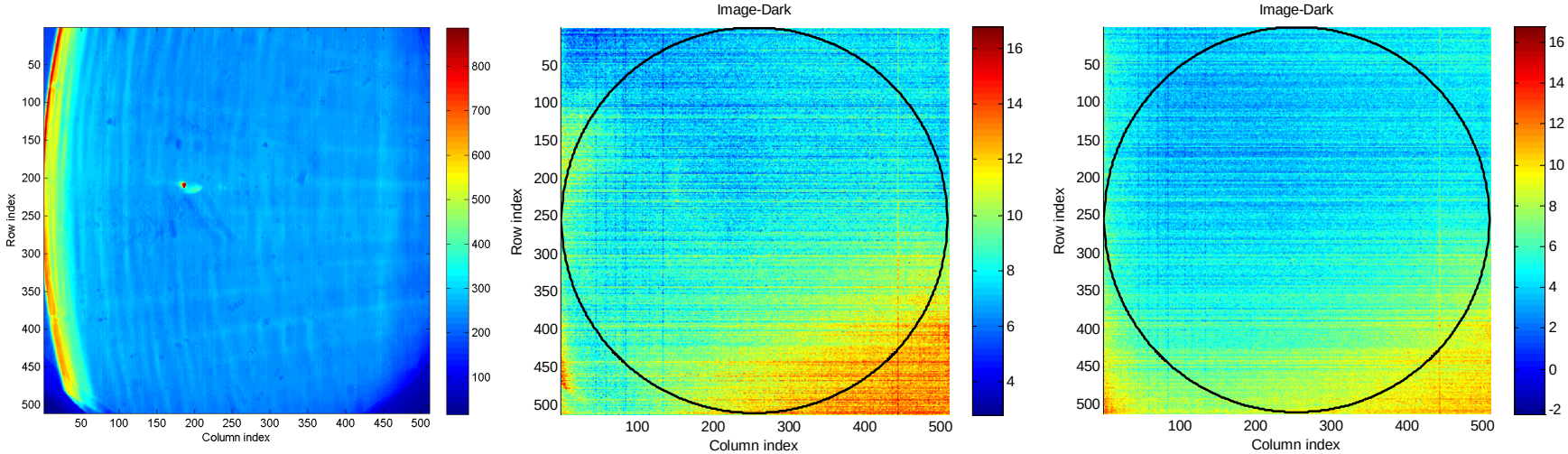

Unit under test: STRoC prototype	Procedure: T3, STRAY LIGHT TEST		
Sun Angle	30deg	40 deg	50 deg
Meas. straylight Mean value	6.80E+04 e/s/pix.	2.26E+03 e/s/pix.	1.39E+03 e/s/pix.
Meas. Straylight Max value	2.29E+05 e/s/pix.	4.34E+03 e/s/pix.	3.72E+03 e/s/pix.
Sun Rescaled straylight Mean value	1.02E+06 e/s/pix.	3.39E+04 e/s/pix.	2.09E+04 e/s/pix.
Sun Rescaled straylight Max value	3.44E+06 e/s/pix.	6.51E+04 e/s/pix.	5.58E+04 e/s/pix.
Mean PST value	1.02E-05	3.38E-07	2.08E-07
Max PST value	3.42E-05	6.49E-07	5.56E-07
Requisite on PST value	N.A.	< 5*10^(-7)	< 5*10^(-7)
Test result	-	P	P

The mean PST values **over the entire detector** are within the maximum allowable limit. The greater contributions of straylight are outside the FOV area.

Straylight Test: Results

Running the acquired images under a raw background algorithm, i.e., computing the image mean value on the pixel encircled by the FOV area only, a 8.6 DN value of the background was measured for the 40 deg SEA condition and a 5.0 DN value for the 30 deg SEA image.
These values of the noise floor are negligible for star extraction especially considering of using a more suitable background algorithm (e.g., the Run Length Encoding algorithm)

The effects of straylight beyond 40 deg are negligible

Night Sky Test

STRoC Test Plan					
Test type	**Test purpose**	**Assembly level**	**Light source**	**Measurement system**	**Pass/Fail criteria**
Night Sky Test (T4)	To verify qualitatively the ability of the prototype to acquire the real sky scenario at night.	STRoC prototype	Real sky scenario at night.	Acquisition of the FOV image by using the SSOC EGSE SW and by commanding the Sun Sensor on Chip in camera mode.	N.A.

Night Sky Test

The Night Sky Test was executed at SELEX ES Premises (Florence, Longitude 11° 12' 21'', Latitude 43° 46' 10'') on the 3rd of October 2014 between 9:30 PM and 11:30 PM.

Test was executed with the STRoC prototype in air condition and at ambient temperature.

Acquisitions were performed by commanding the Sun Sensor on Chip in camera mode and by setting the nominal exposure time: 250 msec.

Test was perform with the STRoC in stationary condition and pointed toward the Nadir. Some acquisitions of the full frame image with moon in FOV were also executed.

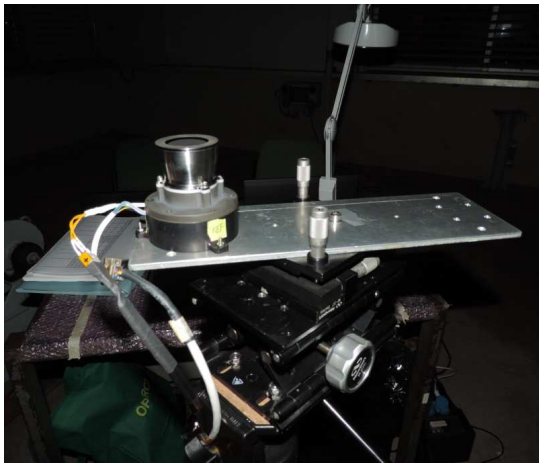

Night Sky Test: Stationary zenith test results

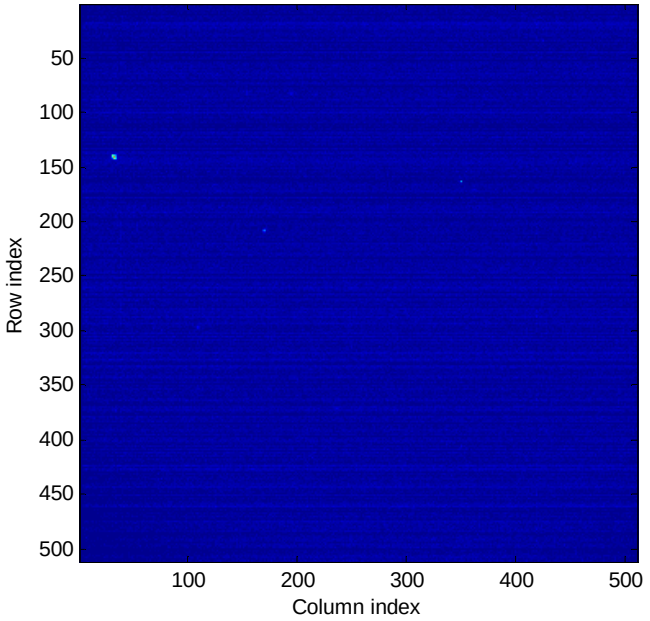

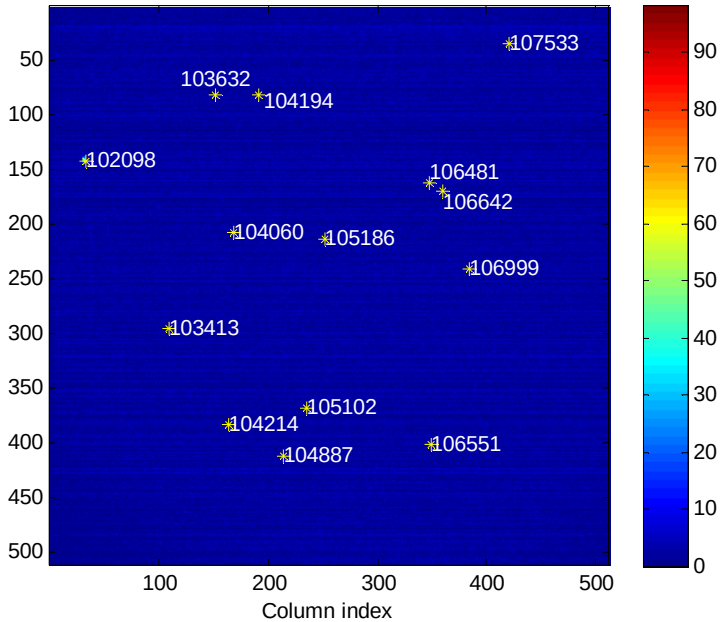

Stars identified on the image with 250 msec exposure time		
Hipparcos index	V mag.	B-V mag.
102098	1.25	0.09
103413	3.94	0.03
103632	4.74	-0.08
104060	3.72	1.61
104194	4.56	1.57
104214	5.2	1.07
104887	3.74	0.39
105102	4.22	0.1
105186	5.04	-0.06
106481	3.98	0.89
106551	4.87	1.09
106642	5.96	1.34
106999	5.09	1.6
107533	4.23	-0.12

To detect stars on the NST images the pixels belonging to a star were identified by selecting the ones on the image with DN value at least double than the adjacent background:

- 14 stars were observed and linked to those of the Hipparcos catalogue
- the fainter one was a 5.96 mv star.

0.4	0.4	1.2	2	0.8	1.2	1.2	1.2	2.4	1.2	0.8
2.8	3.6	4	4.8	4.4	5.2	4.8	5.2	4.4	3.2	5.6
1.6	3.2	2	3.6	3.2	3.6	4	1.2	3.6	1.6	3.6
2.4	0.8	2	1.6	4	4	2	4	2.8	3.6	1.6
0.8	2.8	2.8	4	6	8.8	5.6	4.8	5.2	4.4	4.4
1.6	4.8	4.8	4.4	5.6	13.6	11.6	3.6	4	2	3.6
2.4	0.8	0.4	2.4	1.6	2.8	2	4	3.6	1.2	1.6
0	1.2	0.4	0.4	0.4	1.6	1.6	1.2	0.4	0	0.4
2.4	1.2	4	3.2	5.6	2.4	2	2.4	4	5.2	2.8
2.4	0	0.4	0	0.4	1.6	0.4	3.6	0.4	2.4	0.8
1.2	0.4	2.8	0	1.2	0.4	1.6	2.8	0.8	2	0.8

Night Sky Test: Stationary zenith test results

The night sky test data of the Zenith test was used to try a sensor calibration:

Angular errors on star interdistances before calibration

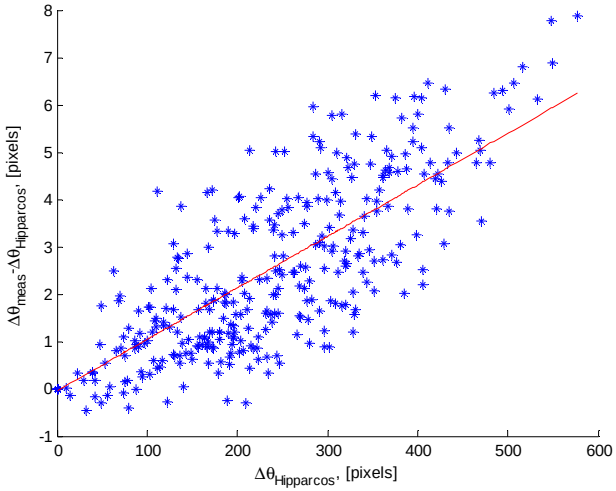

Angular errors on star interdistances after calibration

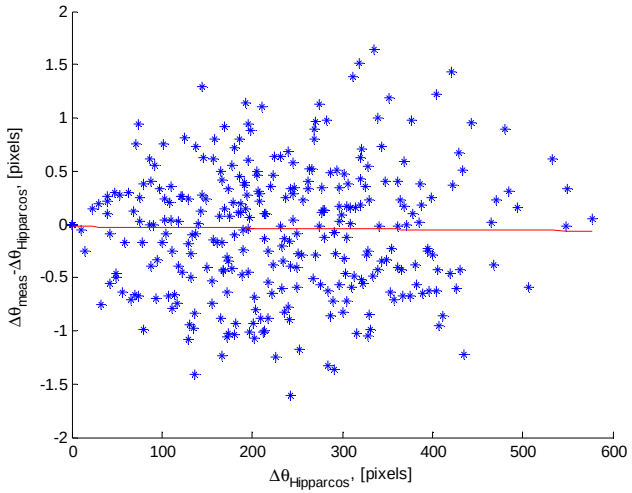

- The residual focal error after calibration is: -1.3 um.
- The standard deviation of the angular errors on star interdistances after the calibration is ~0.6 pixels giving an estimation of the **attitude determination performance of about 20 arcsec 1 sigma** for the whole STR assuming 10 stars tracked.

Performance improvement will be confidently obtained with an optimized detector and a proper SW algorithm.

Night Sky Test: Moon in FOV acquisitions

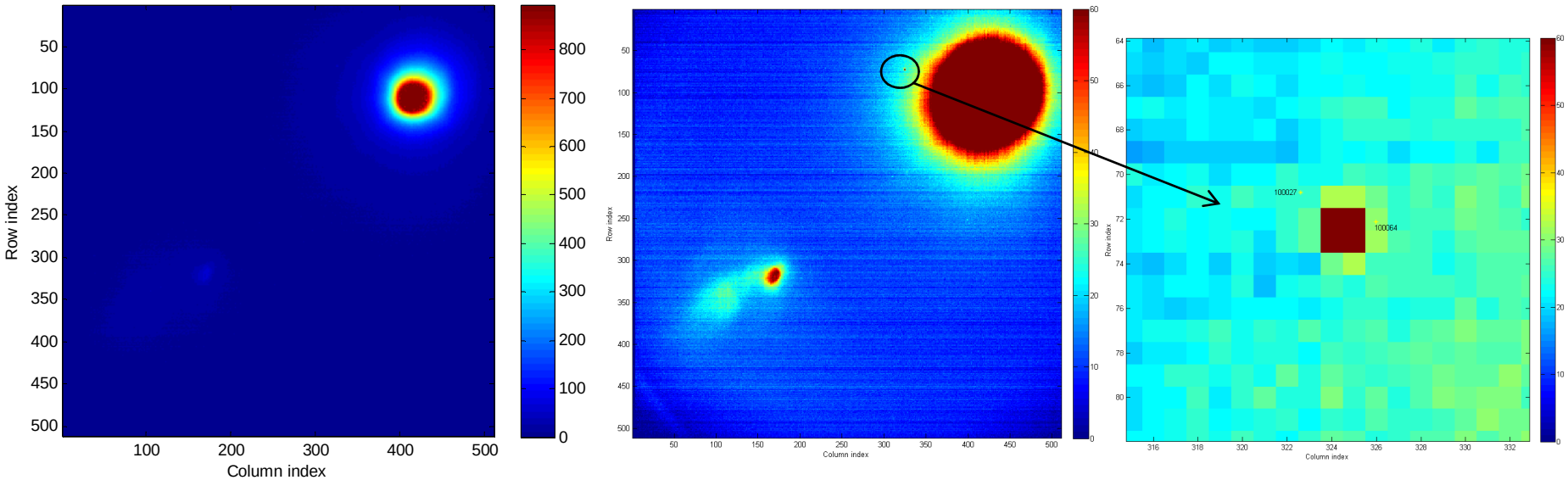

By investigating the sky over Selex ES at the acquisition time (i.e., about 10:45 PM Italian time) we can suppose that the circled spot on the image is due to the overlapping of the two spots of the Hipparcos stars that were near the Moon at the acquisition time:

Hipparcos catalogue stars		
Star Index	**m_V**	**B-V**
100064	3.58	0.88
100027	4.3	0.93

Mass measurement

STRoC Test Plan					
Test type	**Test purpose**	**Assembly level**	**Light source**	**Measurement system**	**Pass/Fail criteria**
Mass measurement	To measure overall mass of the STRoC prototype	STRoC prototype including connectors, shims for focalization, detector and electronic board	N.A.	A OHAUS SCOUT scale	Expected mass value with contingency = 170 deg (see the mass budget in the design report RD 2)

Mass measurement: Results

Unit under test: STRoC prototype	Test: MASS MEASUREMENT	
Parameter: mass	**Nominal value with contingency from mass budget in the design report**	**Measured Value**
Mass of the sensor	170 g	**197.6 g**

The greater measured mass value respect to design estimation is mainly due to following items:

- the prototype sensor case is larger than that use for mass budget to accommodate the Sun Sensor on Chip ESA Breadboard
- measured mass includes Sun Sensor on Chip ESA Breadboard, shims for focalization, electronics and connectors

Thus, considering all these model differences, measured mass is compliant with predictions.

Compliance matrix vs. SOW STRoC specifications

No.	Requirement	ESA Note	Status of Compliance	SES Note
1	The STR structure and optics shall have a combined mass of less than 120g	Test	Not Compliant	The overall mass is slightly greater than required. An optimization in the follow on phase could be considered. In any case the mass predictions are judged acceptable and suitable for using the optics in the nano and micro satellites class.
2	The STR design shall assume a power dissipation of the electronics of between 0.35 and 0.45 Watts (constant) for the thermal design.	For information	Compliant	Following values for electronic dissipations were assumed: • APS detector: 0.35 W • PCB card: 0.1 W
3	The STR design shall be able to keep the chip temperature at <30deg C with a s/c mounting plate temperature of 50deg C and the sun at 40 deg from the boresight without the use of active cooling.	Test	Compliant	An APS temperature lower than 30 deg in operating condition (as required) with a s/c mounting plate temperature of 40deg and the Sun at 40 deg from the boresight was predicted by thermal analysis.
4	The STR optical performance shall be consistent with a STR performance of 12 arcsec (absolute accuracy excluding bias) over the full temperature range. The contractor shall derive the required optical specification.	Test	Partially Compliant	An estimation of the attitude determination performance of about 20 arcsec 1 sigma for the whole STR assuming 10 stars tracked was obtained by night sky test results with a proper calibration. Performance improvement will be confidently obtained with an optimized detector and a proper SW algorithm.

Compliance matrix vs. SOW STRoC specifications

No.	Requirement	ESA Note	Status of Compl.	SES Note
5	The STR design shall be able to operate nominally with all sun aspect angles outside of the SEA of 40deg and with the Earth outside of the Earth Exclusion Angle of 25 deg.	Test hot and cold case	Partially Compliant	In hot cases the design solution allows acceptable temperature on the detector. On the other hand a potential area of further investigation is related to the cold survival temperature that fall out of typical APS detector survival ranges in the condition of thermal isolation from the S/C. A survival heater may be foreseen . Straylight analysis and test results are compliant
6	The STR optical design shall assume a 15 deg full cone FoV, a 10micron pixel pitch, a 512*512 pixel array, 45% peak QE*FF, a 4Hz update rate and all detector noise sources to be 40e per pixel each.	For information	Compliant	
7	The STR shall be designed to survive 18years in GEO.	Therefore only rad hard glass may be used.	TBA	Dedicated analysis will be performed during the detailed OH design
8	The STR shall be designed for low cost and ease of AIT.	This implies few optical elements and few mechanical elements and removal of the need for focusing by shimming of the detector.	TBA	The current OG design was implemented having in mind this key requirement. Further investigation shall be performed on the detailed OH design on both aspects of assembly / integration and test. Specific test setups may be studied for parallel testing of several OHs at the same time.

Compliance matrix vs. proposed STRoC requirements

Requirement	Value	Status of compliance	Remarks
Field of view	+7.5 degree	Compliant	15 degree full cone
Entrance pupil diameter	15 mm	Compliant	The objective was designed and manufactured by taking into account the entrance pupil diameter value required.
Detector details	512x512 pixels, 10µm size	Compliant	The detector used for the prototype is the 512x512x10µm CMOS detector designed in “DIGITAL SUN SENSOR ON A CHIP PROTOTYPING” ESTEC CONTRACT 21835/08/NL/ST. Detector shall be improved for STR applications. A suitable candidate is the FaintStar detector currently developed by CMOSIS under an ESA study contract.
Spectral range	500 nm – 950 nm	Compliant	The optical design is optimized in the waveband 500nm÷950nm at the reference environmental condition of pressure 0 ATM and temperature 5°C.
Optical bench material	Aluminum/Titanium	Compliant	The trade-off led to a full titanium structure with few elements in aluminum.
Operating temperature range	-30°C / +40°C	Partially compliant	In hot cases the design solution allows acceptable temperature on the detector. On the other hand a potential area of further investigation is related to the cold survival temperature that fall out of typical APS detector survival ranges in the condition of thermal isolation from the S/C. A survival heater may be foreseen

Compliance matrix vs. proposed STRoC requirements

Requirement	Value	Status of compliance	Remarks
Optical quality	Ensquared energy within 1 pixel: 28% - 45% Ensquared energy within 2 pixels: >90%	Partially compliant	The system does not reach the design goal of 1 pixel ensquared energy: measured 46% value instead of 45% maximum acceptance value. This result was observed also during the analysis executed in the frame of the design report, in which the 1 pixel ensquared energy at +15°C for on axis was estimated of 46.7%. On the basis of SES experience in star tracker sensors, the expected deterioration of performance due to this non-compliance is considered acceptable for this particular sensor. As predicted by analysis, the 2 pixel ensquared energy is not greater than 90%, but this goal is reached whitin 3 pixels.
Distortion	<1%	Compliant	Whole FOV
Stray light attenuation	5x10-7 (Exclusion sun angle 40 deg)	Compliant	Verified by analysis and test
Dimensions	Diameter <22 mm Length <27 mm (without baffle)	Compliant	The objective is 27.02 mm length and largest lens has a 19 mm diameter.

Conclusions

- A miniaturized optics was designed for star tracker application
- The design led to a simple solution with radiative thermal control and monolithic barrel acting as housing
- Overall optics dimensions are 27mm length with largest lens diameter of 19mm
- A protoype was built and tested using an APS detector (Selex ES' Sun Sensor on Chip prototype, 512x512x10um pixels)
- The tests prove the suitability of the optics and thermal design

Future steps and development

Proven concept ready for a follow on and full qualification unit with:

- Optics layout optimized to fit with next generation "on chip" detectors with low readout noise, like FAINTSTAR (1024x1024x10um pixels) or specifically designed ones
- Thermal design refined due to increased localized power consumption of "on chip" detectors
- Trade off between on chip and off chip clustering and centroiding and background removal algorithms for different accuracy classes
- Smart OH: On board pre-processing + central computer algorithms

THANK YOU FOR YOUR ATTENTION

Paolo Fidanzati
Chiara Finocchietti

Selex ES

150 ANNI DI TECNOLOGIA